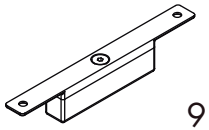

9132948

1

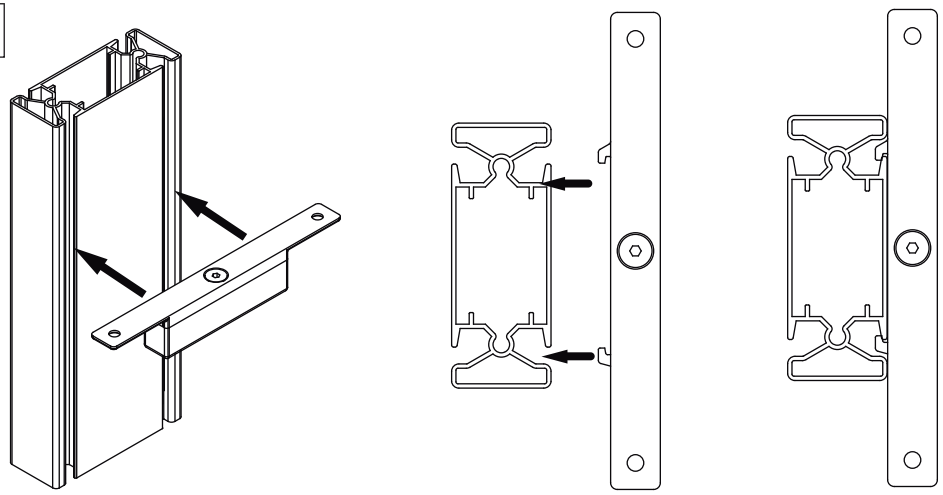

2

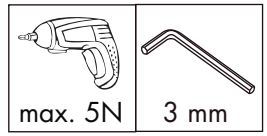


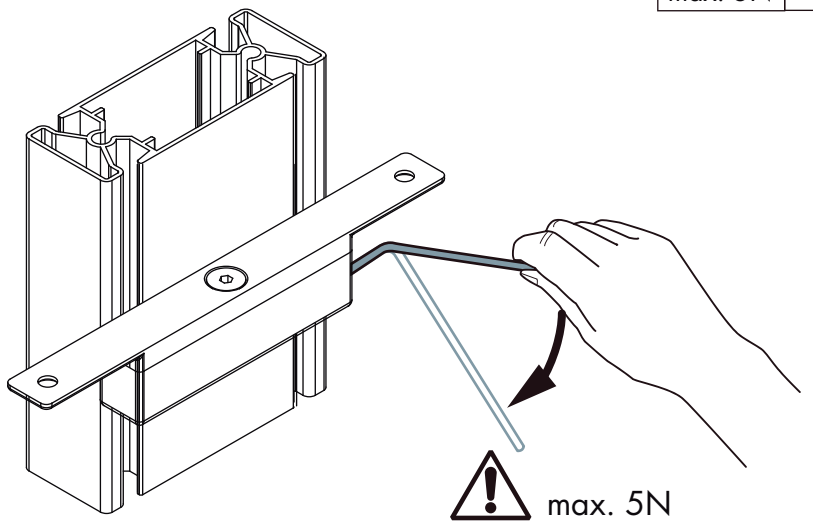


3

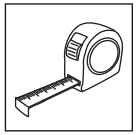

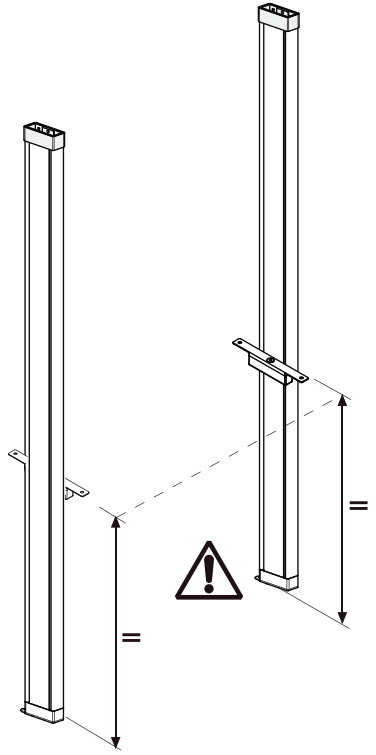


4

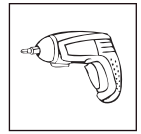

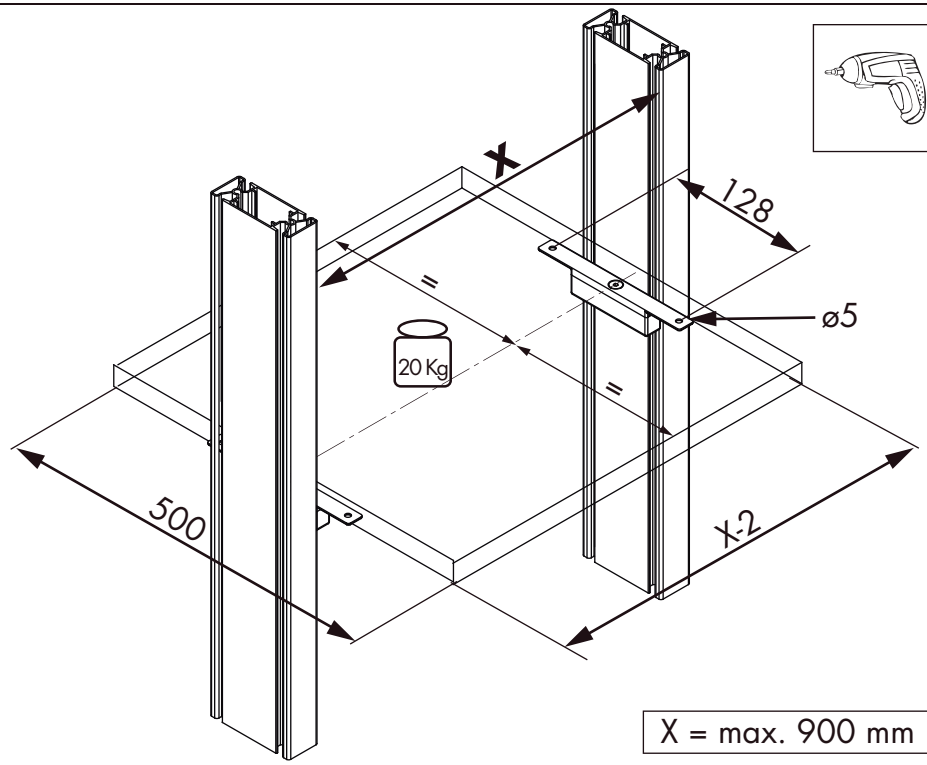


X = max. 900 mm

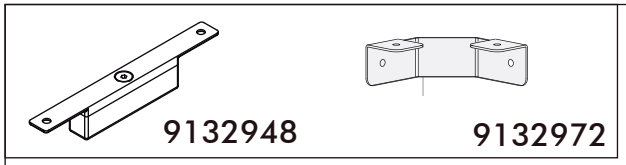
9132948
9132972

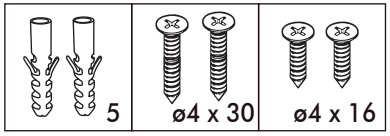
5
ø4 x 30
ø4 x 16

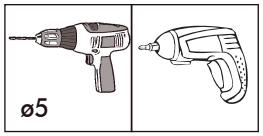
ø5

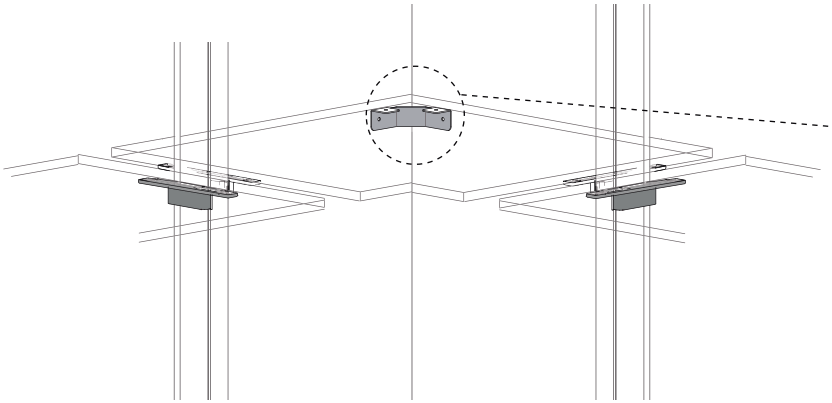

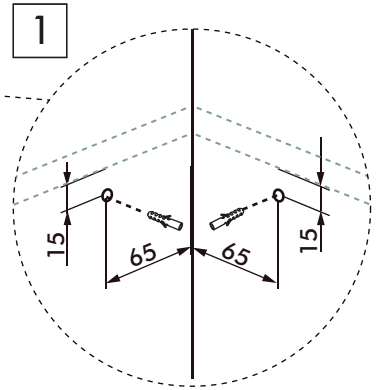
1
15
65
65
15

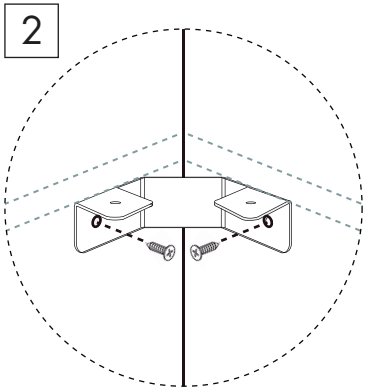
2

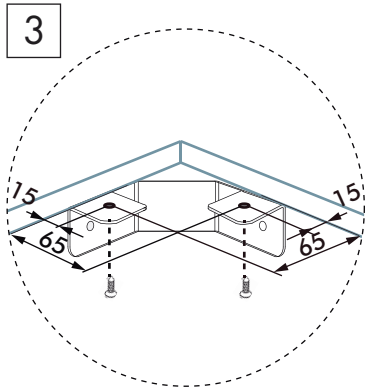
3
15
15
65
65

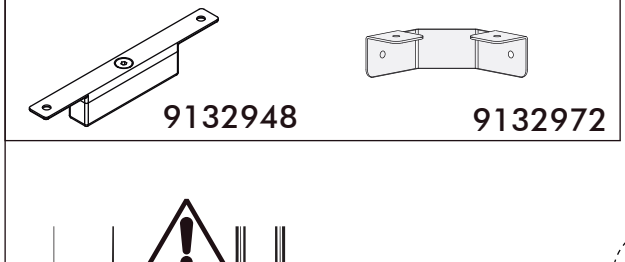
9132948
9132972

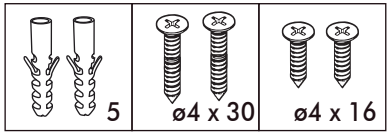
5
ø4 x 30
ø4 x 16

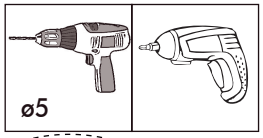
ø5

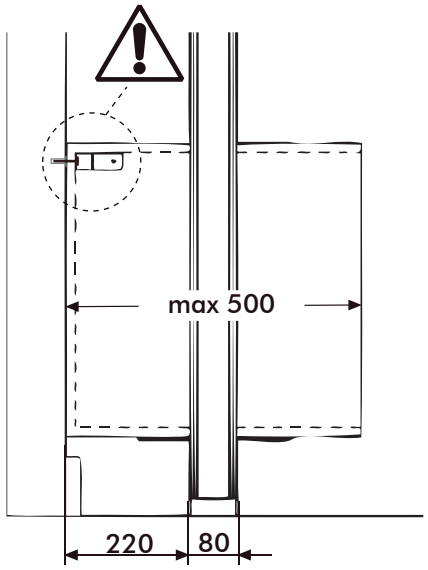
max 500
220
80

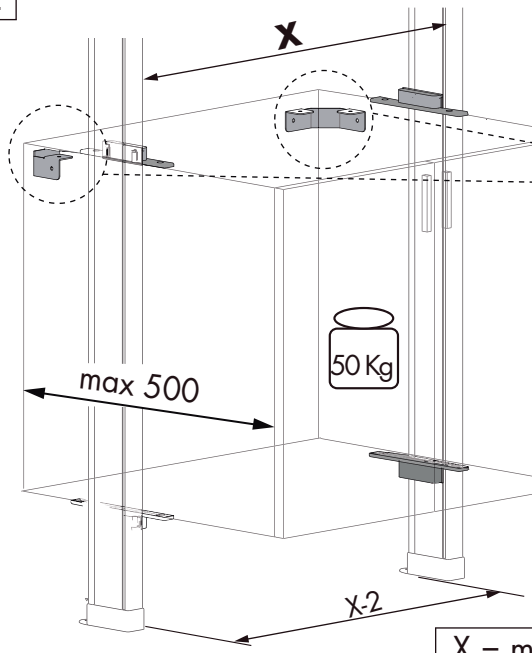
X
max 500
50 Kg
X-2

X = max. 900 mm

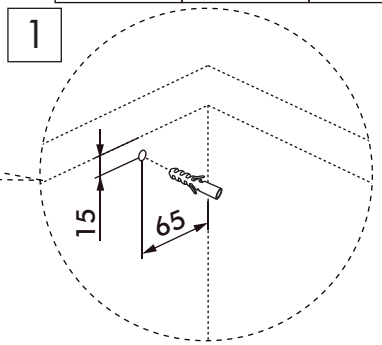
1
15
65

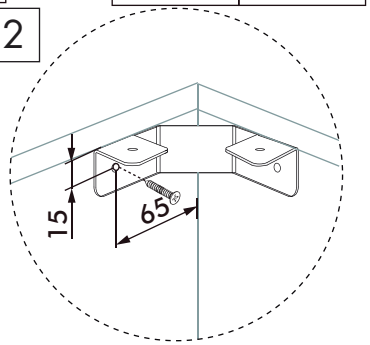
2
15
65

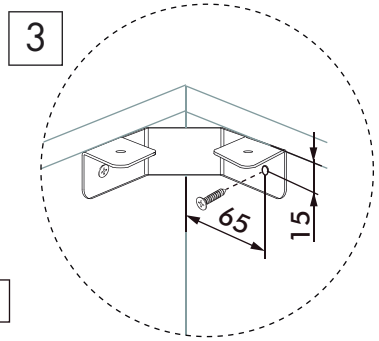
3
65
15

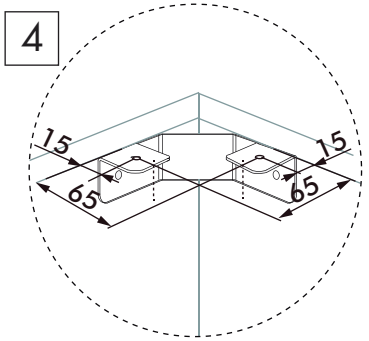
4
15
15
65
65